FORGED
TRUNNION MOUNTED
2″ - 36″ | Class 150 - Class 2500

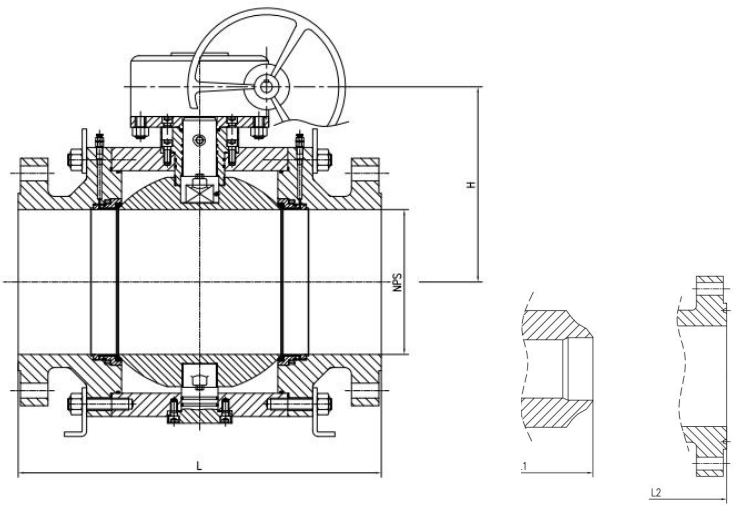

Standards

Steel ballvalves:API608/API6D
Steelballvalves:ISO14313
Fire resistant:API607
Anti static:API608
Steel valves:ASME B16.34
Face to face:ASME B 16.10
Endflanges:ASMEB16.5
Butt weld ends:ASME B16.25
Inspection and test:API598/API6D

General features

Full port design
Boited bonnet(BB)split body
Three plece body for 12°&above
Trunnion mounted ball type
Blow-out proof stem
Fire resistant construction
Anti static device
Stopper device
ISO 5211 Mounting pad
Flanged or butt weld ends
Available with manual worm gear operator

No.	Position	Material
1	Body	A105, A182-F316, A350-LF2
2	Bonnet	A105, A182-F316, A350-LF2
3	ball	A182-F304, A182-F316
4	Stem	A276-304, A276-316
5	Seat	A182-F316, A350-LF2+ENP, A105+ENP
6	Stem insert	Glass filled PTFE
7	Seat spring	A313-304, Inconel X-750
8	Seat O-ring	NBR, Viton, Viton
9	Stem O-ring	NBR, Viton
10	Bonnet gasket	Graphite+304, Graphite+316
11	Bonnet O-ring	NBR, Viton
12	Antistatic spring	A313-304, A313-316
13	Grounding plunger	A182-F304, A182-F316
14	Bonnet stud	A193-B7, A193-B8, A320-L7
15	Bonnet stud nut	A194-2H, A194-8, A194-4
16	Trunnion	A276-304, A276-316
17	Trunnion bearing	304+PTFE, 316+PTFE
18	Gland	A105, A182-F316, A350-LF2
19	Gland bolt	A193-B7, A193-B8
20	Stop plate	Carbon steel, Carbon steel+Zn
21	Handle	Carbon stee

» CLASS 150

SIZE('')	L(MM)	L1(MM)	H(MM)	W(MM)	WT(KG)	
	RF	BW			RF	BW
2	178	216	120	400	28	25
1-1/2	190	241	150	400	35	28
3	203	283	180	600	55	49
4	229	305	235	600	80	71
6	394	457	250	600	190	182
8	457	521	280	600	290	277
10	533	559	320	800	445	423
12	610	635	390	800	570	553
14	686	762	420	800	780	747
16	762	838	555	800	1520	1481
18	864	914	600	800	2300	2266
20	914	991	635	800	2500	2460
24	1067	1143	710	800	3950	3904
26	1143	1245	750	1000	4890	4939
28	1245	1346	800	1000	6300	6362
30	1295	1397	865	1000	7100	8149
32	1372	1524	915	1000	8950	9000
36	1524	1727	980	1000	13500	13570

» CLASS 300

SIZE('')	L(MM)	L1(MM)	H(MM)	W(MM)	WT(KG)	
	RF	BW			RF	BW
2	216	216	120	400	30	24
1-1/2	241	241	150	400	40	31
3	283	283	180	600	60	49
4	305	305	235	600	90	72
6	403	403	250	600	200	169
8	502	521	280	600	325	280
10	568	559	320	800	490	424
12	648	635	390	800	690	598
14	762	762	420	800	990	872
16	838	838	555	800	1810	1665
18	914	914	600	800	2620	2440
20	991	991	635	800	2860	2635
24	1143	1143	710	800	4430	4075
26	1245	1245	750	1000	5430	4880
28	1346	1346	800	1000	6810	6225
30	1397	1397	865	1000	7655	7115
32	1524	1524	915	1000	9590	9230
36	/	/	/	//	/	/

» CLASS 600

SIZE('')	L/L1(MM)	L2(MM)	H(MM)	W(MM)	WT(KG)	
	RF/BW	RTJ			RF/RTJ	BW
2	292	295	165	400	34	27
1-1/2	330	333	180	600	53	43
3	356	359	200	600	65	49
4	432	435	280	600	125	95
6	559	562	310	800	245	188
8	660	664	355	800	505	418
10	787	791	410	800	640	495
12	838	841	455	800	910	740
14	889	892	490	800	1380	1185
16	991	994	535	800	2250	1960
18	1092	1095	630	1000	3400	3050
20	1194	1200	650	1000	3850	3406
24	1397	1407	765	1000	4900	4275
26	1448	1461	810	1000	6700	6025
28	1549	1562	880	1000	8300	7590

» CLASS 900

SIZE('')	L/L1(MM)	L2(MM)	H(MM)	W(MM)	WT(KG)	
	RF	BW			RF/RTJ	BW
2	368	371	170	600	45	37
1-1/2	419	422	190	600	65	53
3	381	384	210	600	73	56
4	457	460	290	800	135	98
6	610	613	320	800	360	291
8	737	740	390	800	650	545
10	838	841	430	800	930	760
12	965	968	470	800	1350	1145
14	1029	1038	530	800	1890	1650
16	1130	1140	610	1000	3100	2750
18	1219	1232	660	1000	4300	3875
20	1321	1334	700	1000	4950	4410
24	1549	1568	780	1000	7100	6485

» CLASS 1500

SIZE('')	L/L1(MM)	L2(MM)	H(MM)	W(MM)	WT(KG)	
	RF	BW			RF/RTJ	BW
2	368	371	170	600	55	40
1-1/2	419	422	190	600	75	55
3	470	473	210	800	95	65
4	546	549	290	800	150	115
6	705	711	330	800	540	420
8	832	841	400	800	880	865
10	991	1000	440	800	1360	1025
12	1130	1146	560	1000	1980	1555
14	1257	1276	640	1000	3100	2600
16	1384	1407	690	1000	4650	3930

» CLASS 2500

SIZE('')	L/L1(MM)	L2(MM)	H(MM)	W(MM)	WT(KG)	
	RF/BW	RTJ			RF/RTJ	BW
2	451	454	190	600	68	54
1-1/2	508	540	230	800	95	74
3	578	584	280	800	120	91
4	673	683	360	800	185	122
6	914	927	400	800	675	555
8	1022	1038	480	1000	1100	918
10	1270	1292	520	1000	1650	1355
12	1422	1445	670	1000	2300	2950
14	/	/	/	/	/	/
16	/	/	/	/	/	/