CASTING
TRUNNION MOUNTED
2″ - 36″ | Class 150 - Class 2500

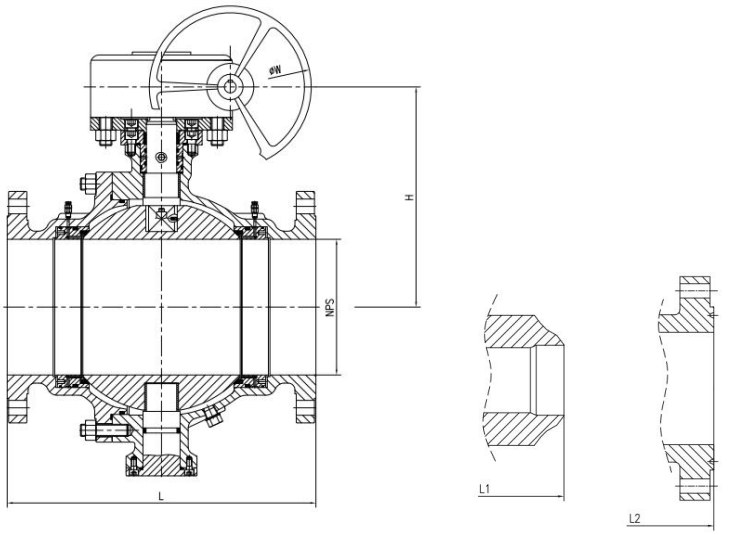

Standards

Steelballvalves:API608/API6D
Steel ball valves:ISO 14313
Fireresistant:API607
Antistatic:API608
Steel valves:ASME B16.34
Face to face:ASME B 16.10
End flanges:ASME B16.5
Buttweldends:ASMEB16.25
Inspection and test:API598/API6D

General features

Full port design
Bolted bonnet(BB)split body
Three piece body for 12"&above
Trunnion mounted ball type
Blow-out proof stem
Fire resistant construction
Antistatic device
Stopper device
ISO 5211 Mounting pad
Flanged or butt weld ends
Available with manual worm gear operator

No.	Position	Material
1	Body	A216-WCB, A351-CF8M, A352-LCB
2	Bonnet	A216-WCB, A351-CF8M, A352-LCB
3	ball	A182-F304, A182-F316
4	Stem	A276-304, A276-316
5	Seat	A105+ENP, A182-F316, A350-LF2+ENP
6	Stem insert	Glass filled PTFE
7	Seat spring	A313-304, Inconel X-750
8	Seat O-ring	NBR, Viton
9	Stem O-ring	NBR, Viton
10	Bonnet gasket	Graphite+304, Graphite+316
11	Bonnet O-ring	NBR, Viton
12	Antistatic spring	A313-304, A313-316
13	Grounding plunger	A216-WCB, A182-F316, A182-F304
14	Bonnet stud	A193-B7, A193-B8, A320-L7
15	Bonnet stud nut	A194-2H, A194-8, A194-4
16	Trunnion bearing	A313-304, A313-316
17	Trunnion bearing	304+PTFE, 316+PTFE
18	Gland flange	A216-WCB, A351-CF8M, A352-LCB
19	Gland bolt	A193-B7, A193-B8
20	Stop plate	Carbon steel, Carbon steel+Zn
21	Handle	Carbon steel

» CLASS 150

SIZE('')	L(MM)	L1(MM)	H(MM)	W(MM)	WT(KG)	
	RF	BW			RF	BW
2	178	216	177	350	15	13.5
1-1/2	190	241	190	400	19	15.5
3	203	283	210	500	27	24.5
4	229	305	235	500	38	32.5
6	394	457	530	600	81	76
8	457	521	625	600	140	132
10	533	559	650	600	160	147
12	610	635	780	600	205	182
14	686	762	790	800	260	241
16	762	838	920	800	390	370
18	864	914	970	800	510	495
20	914	991	1100	800	750	726
24	1067	1143	1150	800	1200	1125
26	1143	1245	1290	800	1400	1250
28	1245	1346	1400	800	1860	1640
30	1295	1397	1630	800	2100	1930
32	1372	1524	1840	800	2530	2390
36	1524	1727	2050	800	2970	2760

» CLASS 300

SIZE('')	L(MM)	L1(MM)	H(MM)	W(MM)	WT(KG)	
	RF	BW			RF	BW
2	216	216	177	350	19	14
1-1/2	241	241	190	400	24	16
3	283	283	210	500	34	25
4	305	305	235	500	48	34
6	403	403	530	600	101	82
8	502	521	625	600	175	145
10	568	559	650	600	200	155
12	648	635	780	600	255	185
14	762	762	790	800	325	238
16	838	838	920	800	485	375
18	914	914	970	800	635	516
20	991	991	1100	800	935	782
24	1143	1143	1150	800	1500	1280
26	1245	1245	1290	800	1750	1375
28	1346	1346	1400	800	2225	1825
30	1397	1397	1630	800	2450	2180
32	1524	1524	1800	800	2870	2260
36	/	/	/	/	/	/

» CLASS 600

SIZE('')	L/L1(MM)	L2(MM)	H(MM)	W(MM)	WT(KG)	
	RF/BW	RTJ			RF/RTJ	BW
2	292	295	180	350	26	19
1-1/2	330	333	193	400	35	25
3	356	359	215	500	58	42
4	432	435	241	500	81	51
6	559	562	540	600	142	82
8	660	664	635	600	287	200
10	787	791	665	600	540	395
12	838	841	790	600	780	610
14	889	892	810	800	1000	805
16	991	994	925	800	1300	1010
18	1092	1095	985	800	1700	1350
20	1194	1200	1130	800	2100	1656
24	1397	1407	1185	800	3400	2775
26	1448	1461	1335	800	3800	3125
28	1549	1562	1450	800	4500	3790

» CLASS 900

SIZE('')	L/L1(MM)	L2(MM)	H(MM)	W(MM)	WT(KG)	
	RF/BW	RTJ			RF/RTJ	BW
2	368	371	219	500	31	23
1-1/2	419	422	235	500	43	31
3	381	384	260	500	68	51
4	457	460	390	600	98	61
6	610	613	655	600	171	102
8	737	740	770	600	345	240
10	838	841	805	600	650	480
12	965	968	965	800	940	735
14	1029	1038	980	800	1205	965
16	1130	1140	1145	800	1565	1215
18	1219	1232	1195	800	2050	1625
20	1321	1334	1360	800	2535	1995
24	1549	1568	1425	800	3950	3335

» CLASS 1500

SIZE('')	L/L1(MM)	L2(MM)	H(MM)	W(MM)	WT(KG)	
	RF/BW	RTJ			RF/RTJ	BW
2	368	371	285	500	49	33
1-1/2	419	422	306	500	67	44
3	470	473	338	600	106	73
4	546	549	506	600	153	87
6	705	711	852	600	268	145
8	832	841	1000	800	540	345
10	991	1000	1045	800	1020	685
12	1130	1146	1255	800	1475	1050
14	1257	1276	1270	800	1885	1385
16	1384	1407	1485	800	2455	1735

» CLASS 2500

SIZE('')	L/L1(MM)	L2(MM)	H(MM)	W(MM)	WT(KG)	
	RF/BW	RTJ			RF/RTJ	BW
2	451	454	304	500	55	41
1-1/2	508	540	327	600	76	55
3	578	584	362	600	120	91
4	673	683	540	600	173	110
6	914	927	911	800	302	182
8	1022	1038	1070	800	612	430
10	1270	1292	1120	800	1150	855
12	1422	1445	1345	800	1665	1315
14	/	/	/	/	/	
16	/	/	/	/	/	/