# Metallisch dichtende Absperrklappe

ASME | Abmessungen und Fertigungsnormen

## Class 150/300/600/900/1500 – Abmessungen

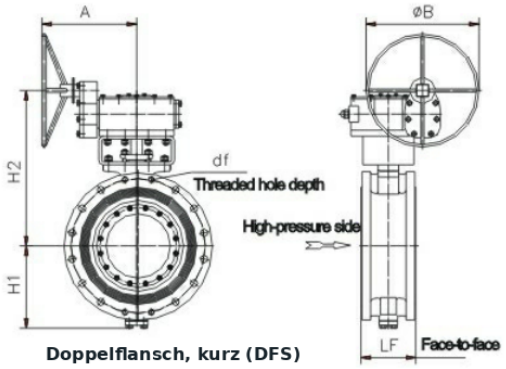


Doppelflansch, kurz (DFS)

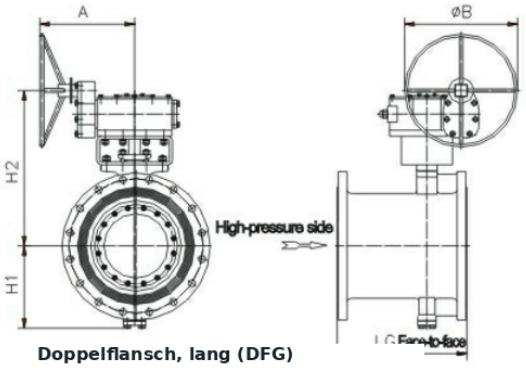


Doppelflansch, lang (DFG)

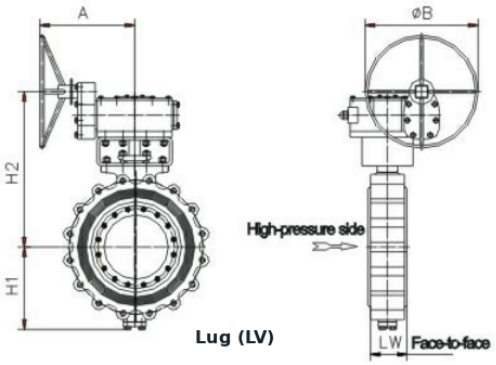


Lug (LV)

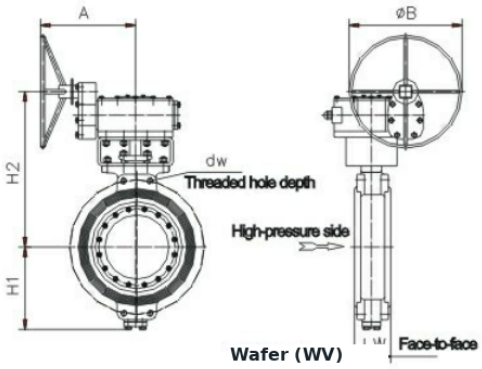


Wafer (WV)

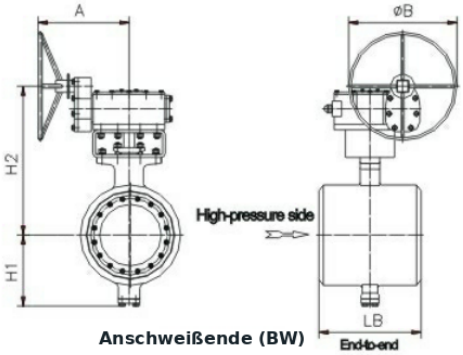


Anschweißende (BW)

Fertigungsnormen
Konstruktion: API 609, ASME B16.34 , **DIN EN**
Baulänge: API 609, ASME B16.10
Flanschanschluss: ASME B16.5 (NPS = 24) / B16.47 (Serie A)
Schweißenden: ASME B16.25
Prüfung: API 598 , **DIN EN 12266-1/2 , EN 10204-3.1**
Feuerbeständigkeitsprüfung: API 607
Weitere Normen und Anforderungen auf Anfrage.

| Class 150 | | | | | | | | | | | Gewicht (kg) | | | | |
|---|---|---|---|---|---|---|---|---|---|---|---|---|---|---|---|
| NPS | LF | LG | LW | LB | H1 | H2 | A | B | df | dw | DFS | DFG | LV | WV | BW |
| 3 | 114 | 203 | 48 | 180 | 110 | 195 | 162 | 200 | – | – | 18 | 22 | 12 | 10 | 15 |
| 4 | 127 | 229 | 54 | 190 | 130 | 215 | 162 | 200 | – | – | 23 | 30 | 18 | 12 | 20 |
| 6 | 140 | 267 | 57 | 210 | 155 | 245 | 162 | 200 | – | – | 32 | 40 | 24 | 15 | 25 |
| 8 | 152 | 292 | 64 | 230 | 190 | 325 | 230 | 350 | – | – | 48 | 71 | 45 | 30 | 49 |
| 10 | 165 | 330 | 71 | 250 | 225 | 380 | 360 | 600 | – | – | 88 | 108 | 68 | 47 | 71 |
| 12 | 178 | 356 | 81 | 270 | 265 | 420 | 402 | 600 | – | – | 128 | 157 | 100 | 79 | 104 |
| 14 | 190 | 381 | 92 | 290 | 290 | 445 | 402 | 600 | – | – | 158 | 195 | 121 | 84 | 144 |
| 16 | 216 | 406 | 102 | 310 | 325 | 515 | 520 | 600 | – | – | 223 | 272 | 175 | 140 | 180 |
| 18 | 222 | 432 | 114 | 330 | 355 | 550 | 543 | 750 | – | 30 | 286 | 344 | 227 | 187 | 232 |
| 20 | 229 | 457 | 127 | 350 | 400 | 590 | 543 | 750 | – | 30 | 338 | 412 | 262 | 227 | 272 |
| 24 | 267 | 508 | 154 | 390 | 455 | 695 | 604 | 750 | – | 35 | 511 | 625 | 395 | 355 | 415 |
| 28 | 292 | 610 | 165 | 430 | 520 | 815 | 642 | 750 | 35 | 35 | 837 | 1025 | 585 | 525 | 605 |
| 30 | 318 | 610 | 190 | 450 | 555 | 850 | 642 | 750 | 35 | 35 | 983 | 1205 | 665 | 585 | 705 |
| 32 | 318 | 660 | 190 | 470 | 580 | 875 | 660 | 750 | 40 | 40 | 1163 | 1450 | 780 | 700 | 720 |
| 36 | 330 | 711 | 203 | 510 | 650 | 990 | 855 | 800 | 40 | 40 | 1566 | 1930 | 1050 | 1080 | 930 |
| 40 | 410 | 762 | 216 | 550 | 710 | 1050 | 855 | 800 | 40 | 40 | 2130 | 2900 | 1570 | 1320 | 1670 |
| 48 | 470 | 864 | 254 | 630 | 820 | 1200 | 950 | 915 | 40 | 40 | 3260 | 3900 | 2300 | 2050 | 2600 |
| 56 | 530 | 965 | 279 | 710 | 970 | 1765 | 1056 | 950 | 45 | 45 | 4700 | 5800 | 3300 | 3100 | 3800 |
| 60 | 560 | 1016 | 318 | 750 | 1020 | 1815 | 1056 | 950 | 45 | 45 | 5250 | 6460 | 3600 | 3480 | 4230 |

# Metallisch dichtende Absperrklappe

ASME | Abmessungen und Gewichte

| Class 300 | | | | | | | | | | | Gewicht (kg) | | | | |
|---|---|---|---|---|---|---|---|---|---|---|---|---|---|---|---|
| NPS | LF | LG | LW | LB | H1 | H2 | A | B | df | dw | DFS | DFG | LV | WV | BW |
| 3 | 114 | 282 | 48 | 180 | 120 | 210 | 162 | 200 | 25 | – | 20 | 25 | 16 | 14 | 17 |
| 4 | 127 | 305 | 54 | 190 | 145 | 245 | 162 | 200 | 25 | – | 30 | 38 | 23 | 20 | 25 |
| 6 | 140 | 403 | 59 | 210 | 180 | 320 | 230 | 350 | 25 | – | 58 | 71 | 45 | 42 | 50 |
| 8 | 152 | 419 | 73 | 230 | 210 | 370 | 402 | 600 | 30 | – | 82 | 98 | 66 | 60 | 71 |
| 10 | 165 | 457 | 83 | 250 | 245 | 445 | 520 | 600 | 30 | 20 | 146 | 170 | 120 | 110 | 130 |
| 12 | 178 | 502 | 92 | 270 | 290 | 780 | 520 | 600 | 35 | 20 | 186 | 224 | 148 | 136 | 160 |
| 14 | 190 | 762 | 117 | 290 | 325 | 525 | 543 | 750 | 35 | 25 | 262 | 312 | 212 | 194 | 228 |
| 16 | 216 | 838 | 133 | 310 | 365 | 585 | 604 | 750 | 40 | 30 | 350 | 412 | 286 | 264 | 308 |
| 18 | 222 | 914 | 149 | 330 | 395 | 640 | 604 | 750 | 40 | 30 | 412 | 496 | 328 | 280 | 358 |
| 20 | 229 | 991 | 159 | 350 | 425 | 735 | 642 | 750 | 40 | 30 | 555 | 660 | 450 | 415 | 485 |
| 24 | 267 | 1143 | 181 | 390 | 505 | 305 | 660 | 750 | 45 | 40 | 760 | 920 | 598 | 544 | 652 |
| 28 | 292 | 1346 | 229 | 430 | 580 | 920 | 855 | 800 | 50 | 40 | 1185 | 1985 | 925 | 845 | 1015 |
| 30 | 318 | 1397 | 241 | 450 | 620 | 950 | 855 | 800 | 55 | 45 | 1490 | 1796 | 1184 | 1082 | 1286 |
| 32 | 318 | 1524 | 241 | 470 | 650 | 1000 | 855 | 800 | 55 | 45 | 1670 | 2030 | 1310 | 1190 | 1430 |
| 36 | 330 | 1727 | 241 | 510 | 710 | 1080 | 130 | 915 | 60 | 50 | 2340 | 2800 | 1878 | 1724 | 2030 |
| 40 | 410 | 1930 | 300 | 550 | 730 | 1505 | 1056 | 950 | 50 | 45 | 3240 | 3850 | 2628 | 2424 | 2832 |
| 48 | 470 | 2134 | 350 | 630 | 830 | 1625 | 1056 | 950 | 55 | 50 | 4085 | 4930 | 3210 | 2922 | 3496 |

| Class 600 | | | | | | | | | | | Gewicht (kg) | | | | |
|---|---|---|---|---|---|---|---|---|---|---|---|---|---|---|---|
| NPS | LF | LG | LW | LB | H1 | H2 | A | B | df | dw | DFS | DFG | LV | WV | BW |
| 4 | 190 | 432 | 64 | 190 | 170 | 285 | 220 | 350 | 25 | 20 | 45 | 56 | 34 | 30 | 36 |
| 6 | 210 | 559 | 78 | 210 | 230 | 365 | 402 | 600 | 30 | 25 | 104 | 128 | 81 | 74 | 89 |
| 8 | 230 | 660 | 102 | 230 | 255 | 440 | 520 | 600 | 35 | 25 | 184 | 221 | 147 | 134 | 159 |
| 10 | 250 | 787 | 117 | 250 | 315 | 490 | 543 | 750 | 35 | 30 | 300 | 362 | 238 | 217 | 258 |
| 12 | 270 | 838 | 140 | 270 | 345 | 580 | 604 | 750 | 35 | 30 | 395 | 478 | 320 | 293 | 346 |
| 14 | 290 | 889 | 155 | 290 | 380 | 605 | 604 | 750 | 40 | 30 | 457 | 554 | 360 | 328 | 393 |
| 16 | 310 | 991 | 178 | 310 | 420 | 685 | 642 | 750 | 45 | 35 | 655 | 790 | 520 | 475 | 565 |
| 18 | 330 | 1092 | 200 | 330 | 470 | 735 | 660 | 750 | 50 | 40 | 797 | 970 | 624 | 566 | 682 |
| 20 | 350 | 1194 | 216 | 350 | 510 | 825 | 754 | 800 | 50 | 40 | 1114 | 1337 | 891 | 816 | 965 |
| 24 | 390 | 1397 | 232 | 390 | 565 | 880 | 855 | 800 | 55 | 45 | 1601 | 1940 | 1262 | 1148 | 1375 |
| 28 | 430 | 1549 | 270 | 430 | 630 | 1000 | 900 | 915 | 60 | 45 | 2420 | 2906 | 1934 | 1772 | 2096 |
| 30 | 450 | 1651 | 290 | 450 | 660 | 1470 | 1056 | 950 | 60 | 45 | 3040 | 3592 | 2488 | 2304 | 2672 |
| 32 | 470 | 1778 | 310 | 470 | 695 | 1510 | 1056 | 950 | 70 | 50 | 3314 | 3948 | 2688 | 2468 | 2896 |
| 36 | 510 | 2083 | 350 | 510 | 755 | 1570 | 1056 | 950 | 75 | 50 | 3900 | 4700 | 3090 | 2820 | 3360 |

| Class 900 | | | | | | | | | | Gewicht (kg) | | | |
|---|---|---|---|---|---|---|---|---|---|---|---|---|---|
| NPS | LF | LW | LB | H1 | H2 | A | B | df | dw | DFS | LV | WV | BW |
| 8 | 250 | 170 | 250 | 295 | 475 | 543 | 750 | 50 | 40 | 252 | 204 | 188 | 220 |
| 10 | 270 | 190 | 270 | 335 | 510 | 543 | 750 | 50 | 40 | 327 | 257 | 233 | 280 |
| 12 | 290 | 210 | 290 | 370 | 600 | 604 | 750 | 50 | 40 | 470 | 370 | 336 | 403 |
| 14 | 310 | 230 | 310 | 405 | 675 | 642 | 750 | 55 | 45 | 603 | 483 | 444 | 523 |
| 16 | 330 | 250 | 330 | 435 | 710 | 642 | 750 | 60 | 50 | 705 | 555 | 515 | 595 |
| 18 | 350 | 270 | 350 | 480 | 805 | 754 | 800 | 70 | 55 | 1080 | 867 | 796 | 938 |
| 20 | 370 | 290 | 370 | 515 | 825 | 855 | 800 | 75 | 60 | 1365 | 1097 | 1008 | 1186 |
| 24 | 470 | 330 | 470 | 600 | 970 | 900 | 915 | 90 | 80 | 2463 | 1950 | 1778 | 2120 |

| Class 1500 | | | | | | | | | | Gewicht (kg) | | | |
|---|---|---|---|---|---|---|---|---|---|---|---|---|---|
| NPS | LF | LW | LB | H1 | H2 | A | B | df | dw | DFS | LV | WV | BW |
| 8 | 310 | 210 | 310 | 350 | 490 | 543 | 750 | 60 | 55 | 297 | 236 | 194 | 256 |
| 10 | 370 | 210 | 370 | 400 | 600 | 604 | 750 | 70 | 60 | 484 | 379 | 310 | 415 |
| 12 | 410 | 270 | 410 | 450 | 700 | 642 | 750 | 75 | 65 | 738 | 578 | 472 | 631 |
| 14 | 450 | 290 | 450 | 480 | 730 | 660 | 750 | 85 | 70 | 930 | 717 | 575 | 788 |
| 16 | 490 | 330 | 490 | 540 | 820 | 855 | 800 | 95 | 85 | 1475 | 1135 | 905 | 1247 |
| 18 | 530 | 350 | 530 | 580 | 870 | 855 | 800 | 100 | 90 | 1752 | 1367 | 1110 | 1496 |
| 20 | 570 | 370 | 570 | 610 | 950 | 900 | 915 | 110 | 100 | 2380 | 1890 | 1565 | 2054 |
| 24 | 650 | 410 | 650 | 700 | 1500 | 1056 | 950 | 130 | 110 | 3447 | 2773 | 2323 | 3000 |

# Metallisch dichtende Absperrklappe

EN | Abmessungen und Fertigungsnormen

## PN 6/10/16/25/40/63/100/160 – Abmessungen

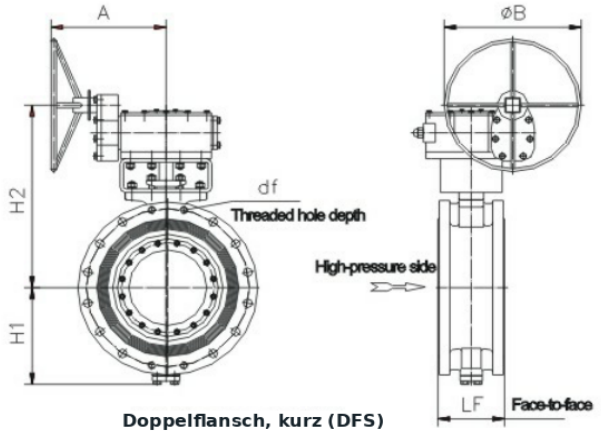


Doppelflansch, kurz (DFS)

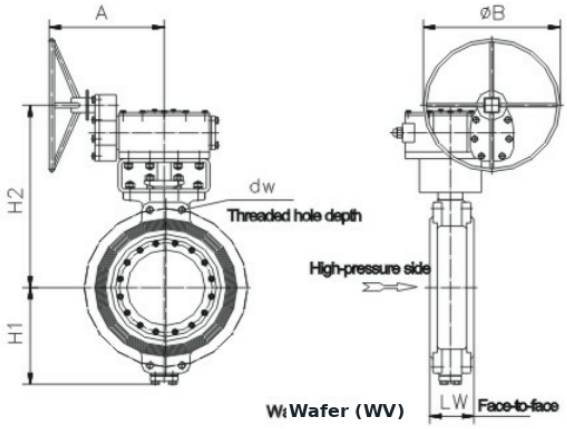


Wafer (WV)

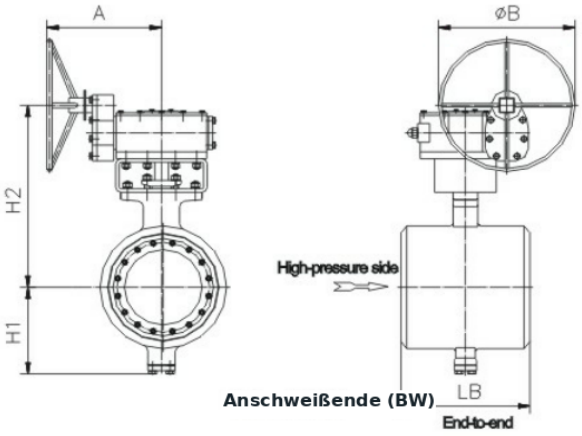


Anschweißende (BW)

Fertigungsnormen
Konstruktion: API 609, ASME B16.34, **DIN EN**
Baulänge: BS EN 558 / ISO 5752
Flansche: BS EN 1092-1
Schweißenden: ASME B16.25
Prüfung: API 598, **EN 12266-1/2 , EN 10204-3.1**
Feuerbeständigkeitsprüfung: API 607
Weitere Normen und Anforderungen
auf Anfrage.

| PN6/10 | | | | | | | | | Gewicht (kg) | | | |
|---|---|---|---|---|---|---|---|---|---|---|---|---|
| DN | LF | LW | LB | H1 | H2 | A | B | dw | DFS/PN16 | DFS/PN10 | wv | BW |
| 80 | 114 | 46 | 180 | 110 | 195 | 162 | 200 | – | 16 | 18 | 13 | 15 |
| 100 | 127 | 52 | 190 | 130 | 215 | 162 | 200 | – | 18 | 20 | 14 | 17 |
| 150 | 140 | 56 | 210 | 155 | 245 | 162 | 200 | – | 26 | 30 | 20 | 25 |
| 200 | 152 | 60 | 230 | 190 | 280 | 162 | 350 | – | 34 | 40 | 26 | 33 |
| 250 | 165 | 68 | 250 | 225 | 360 | 230 | 350 | – | 60 | 66 | 47 | 56 |
| 300 | 178 | 78 | 270 | 260 | 385 | 230 | 600 | – | 68 | 80 | 55 | 67 |
| 350 | 190 | 78 | 290 | 290 | 435 | 360 | 600 | – | 95 | 105 | 71 | 88 |
| 400 | 216 | 102 | 310 | 320 | 470 | 402 | 600 | – | 122 | 138 | 97 | 117 |
| 450 | 222 | 114 | 330 | 340 | 530 | 520 | 600 | – | 174 | 193 | 140 | 166 |
| 500 | 229 | 127 | 350 | 385 | 560 | 520 | 600 | – | 196 | 218 | 155 | 186 |
| 600 | 267 | 154 | 390 | 440 | 635 | 543 | 750 | – | 280 | 322 | 230 | 276 |
| 700 | 292 | 165 | 430 | 510 | 740 | 604 | 750 | 25 | 420 | 485 | 344 | 415 |
| 800 | 318 | 190 | 470 | 570 | 800 | 604 | 750 | 30 | 498 | 585 | 395 | 486 |
| 900 | 330 | 203 | 510 | 620 | 910 | 642 | 750 | 30 | 630 | 741 | 527 | 635 |
| 1000 | 410 | 216 | 550 | 675 | 1000 | 660 | 750 | 30 | 830 | 975 | 673 | 824 |
| 1200 | 470 | 254 | 630 | 800 | 1130 | 754 | 800 | 35 | 1410 | 1655 | 1127 | 1391 |
| 1400 | 530 | 279 | 650 | 910 | 1240 | 855 | 800 | 35 | 2160 | 2540 | 1712 | 2126 |
| 1600 | 600 | 318 | 680 | 1030 | 1435 | 901 | 915 | 40 | 2850 | 3350 | 2310 | 2830 |
| 1800 | 670 | 356 | 720 | 1130 | 1535 | 901 | 915 | 40 | 3520 | 4400 | 2960 | 3680 |
| 2000 | 760 | 406 | 760 | 1230 | 1635 | 901 | 915 | 40 | 4638 | 5797 | 3558 | 4478 |
| 2200 | 800 | 450 | 800 | 1355 | 2160 | 1565 | 950 | 45 | 5220 | 6526 | 4400 | 5460 |
| 2400 | 850 | 500 | 850 | 1460 | 2265 | 1565 | 950 | 45 | 6450 | 8063 | 5320 | 6690 |
| 2600 | 900 | 550 | 900 | 1560 | 2365 | 1565 | 950 | 45 | 7274 | 9093 | 5936 | 7515 |
| 2800 | 950 | 600 | 950 | 1670 | 2475 | 1565 | 950 | 45 | 8545 | 10680 | 6888 | 8784 |
| 3000 | 1000 | 650 | 1000 | 1780 | 2600 | 1565 | 950 | 50 | 11020 | 13770 | 8142 | 9996 |

# Metallisch dichtende Absperrklappe

EN | Abmessungen und Gewichte

| PN16/25 | | | | | | | | | | Gewicht (kg) | | | |
|---|---|---|---|---|---|---|---|---|---|---|---|---|---|
| DN | LF | LW | LB | H1 | H2 | A | B | Df | dw | DFS/PN16 | DFS/PN25 | WV | BW |
| 80 | 114 | 46 | 180 | 110 | 195 | 162 | 200 | – | – | 18 | 20 | 10 | 15 |
| 100 | 127 | 52 | 190 | 130 | 215 | 162 | 200 | – | – | 23 | 25 | 12 | 20 |
| 150 | 140 | 56 | 210 | 155 | 245 | 162 | 200 | – | – | 30 | 36 | 15 | 25 |
| 200 | 152 | 60 | 230 | 190 | 325 | 230 | 350 | – | – | 42 | 55 | 30 | 49 |
| 250 | 165 | 68 | 250 | 225 | 380 | 360 | 600 | – | – | 80 | 104 | 47 | 71 |
| 300 | 178 | 78 | 270 | 265 | 420 | 402 | 600 | – | – | 115 | 158 | 79 | 104 |
| 350 | 190 | 78 | 290 | 290 | 445 | 402 | 600 | – | – | 142 | 174 | 84 | 144 |
| 400 | 216 | 102 | 310 | 325 | 515 | 520 | 600 | – | – | 200 | 245 | 140 | 180 |
| 450 | 222 | 114 | 330 | 355 | 550 | 543 | 750 | – | 30 | 257 | 315 | 187 | 232 |
| 500 | 229 | 127 | 350 | 400 | 590 | 543 | 750 | – | 30 | 304 | 375 | 227 | 272 |
| 600 | 267 | 154 | 390 | 455 | 695 | 604 | 750 | – | 35 | 460 | 560 | 355 | 415 |
| 700 | 292 | 165 | 430 | 520 | 815 | 642 | 750 | 35 | 35 | 753 | 920 | 525 | 605 |
| 800 | 318 | 190 | 470 | 580 | 875 | 660 | 750 | 40 | 40 | 1045 | 1280 | 700 | 720 |
| 900 | 330 | 203 | 510 | 650 | 950 | 855 | 800 | 40 | 40 | 1410 | 1723 | 1080 | 930 |
| 1000 | 410 | 216 | 550 | 710 | 1010 | 855 | 800 | 40 | 40 | 1920 | 2345 | 1320 | 1670 |
| 1200 | 470 | 254 | 630 | 820 | 1090 | 950 | 915 | 40 | 40 | 2935 | 3586 | 2050 | 2600 |
| 1400 | 530 | 279 | 650 | 935 | 1180 | 1056 | 950 | 45 | 45 | 4220 | 5170 | 3100 | 3800 |
| 1600 | 600 | 318 | 680 | 1060 | 1275 | 1056 | 950 | 45 | 45 | 5450 | 6560 | 3680 | 4830 |
| 1800 | 670 | 356 | 720 | 1160 | 1375 | 1056 | 950 | 45 | 45 | 6750 | 8252 | 4580 | 6510 |
| 2000 | 760 | 406 | 760 | 1265 | 1485 | 1056 | 950 | 50 | 50 | 8820 | 10780 | 5860 | 7840 |

| PN40/63 | | | | | | | | | | Gewicht (kg) | | | |
|---|---|---|---|---|---|---|---|---|---|---|---|---|---|
| DN | LF | LW | LB | H1 | H2 | A | B | Df | dw | DFS/PN40 | DFS/PN63 | WV | BW |
| 80 | 114 | 46 | 180 | 120 | 210 | 162 | 200 | 20 | 20 | 17 | 23 | 14 | 17 |
| 100 | 127 | 52 | 190 | 145 | 245 | 162 | 200 | 20 | 20 | 25 | 35 | 20 | 25 |
| 150 | 140 | 56 | 210 | 180 | 320 | 230 | 350 | 25 | 25 | 51 | 65 | 42 | 50 |
| 200 | 152 | 60 | 230 | 210 | 370 | 402 | 600 | 25 | 25 | 68 | 88 | 60 | 71 |
| 250 | 165 | 68 | 250 | 245 | 445 | 520 | 600 | 30 | 30 | 124 | 156 | 110 | 130 |
| 300 | 178 | 78 | 270 | 290 | 780 | 520 | 600 | 30 | 30 | 156 | 205 | 136 | 160 |
| 350 | 190 | 78 | 290 | 325 | 525 | 543 | 750 | 35 | 35 | 218 | 302 | 194 | 228 |
| 400 | 216 | 102 | 310 | 365 | 585 | 604 | 750 | 35 | 35 | 308 | 396 | 264 | 308 |
| 450 | 222 | 114 | 330 | 395 | 640 | 604 | 750 | 35 | 35 | 332 | 462 | 280 | 358 |
| 500 | 229 | 127 | 350 | 425 | 735 | 642 | 750 | 40 | 40 | 485 | 625 | 415 | 485 |
| 600 | 267 | 154 | 390 | 505 | 305 | 660 | 750 | 40 | 40 | 652 | 868 | 544 | 652 |

| PN 100 | | | | | | | | | | Gewicht (kg) | | |
|---|---|---|---|---|---|---|---|---|---|---|---|---|
| DN | LF | LW | LB | H1 | H2 | A | B | Df | dw | DFS | WV | BW |
| 80 | 180 | 64 | 180 | 150 | 225 | 220 | 350 | 25 | 20 | 35 | 22 | 28 |
| 100 | 190 | 64 | 190 | 170 | 285 | 220 | 350 | 25 | 20 | 45 | 30 | 36 |
| 150 | 210 | 76 | 210 | 230 | 365 | 402 | 600 | 30 | 25 | 104 | 74 | 89 |
| 200 | 230 | 89 | 230 | 255 | 440 | 520 | 600 | 30 | 25 | 184 | 134 | 159 |
| 250 | 250 | 114 | 250 | 315 | 490 | 543 | 750 | 35 | 30 | 300 | 217 | 258 |
| 300 | 270 | 114 | 270 | 345 | 580 | 604 | 750 | 35 | 30 | 395 | 293 | 346 |
| 350 | 290 | 127 | 290 | 380 | 605 | 604 | 750 | 40 | 35 | 457 | 328 | 393 |

| PN 160 | | | | | | | | | | Gewicht (kg) | | |
|---|---|---|---|---|---|---|---|---|---|---|---|---|
| DN | LF | LW | LB | H1 | H2 | A | B | Df | dw | DFS | WV | BW |
| 80 | 180 | 64 | 180 | 195 | 315 | 402 | 750 | 25 | 25 | 94 | 71 | 84 |
| 100 | 190 | 64 | 190 | 215 | 350 | 402 | 750 | 25 | 25 | 140 | 105 | 124 |
| 150 | 210 | 76 | 210 | 250 | 400 | 420 | 750 | 30 | 30 | 210 | 135 | 186 |
| 200 | 230 | 89 | 230 | 295 | 475 | 543 | 750 | 30 | 30 | 252 | 188 | 220 |
| 250 | 250 | 114 | 250 | 335 | 510 | 543 | 750 | 35 | 35 | 327 | 233 | 280 |
| 300 | 270 | 114 | 270 | 370 | 600 | 604 | 750 | 35 | 35 | 470 | 336 | 403 |