FORGED FLOATING BALL VALVES

» CLASS 150

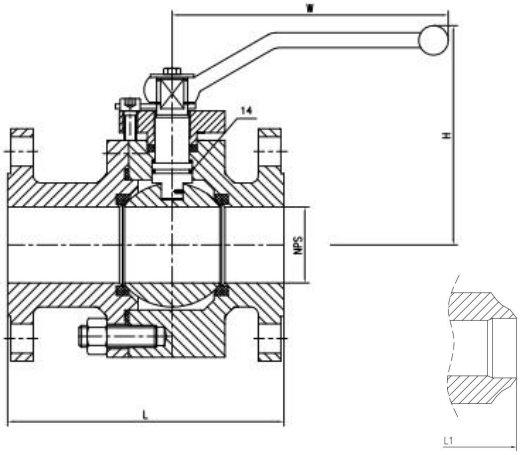

Standards

Steel ball valves:API 608/API 6D
Steelballvalves:ISO14313
Fire resistant:API607
Anti static:API608
Steel valves:ASME B16.34
Face to face:ASME B 16.10
End flanges:ASME B16.5
Butt weld ends: ASME B16.25
Inspection and test: API 598/API 6D

General features

Full port design
Bolted bonnet (BB) split body
Floating ball type
Blow-out proof stem
Fire resistant construction
Anti static device
Stopper device
ISO 5211 Mounting pad
Flanged or butt weld ends
Available with manual worm gear operator

Position	Description	Material
1	Body	A105, A182-F316, A350-LF2
2	Bonnet	A105, A182-F316, A350-LF2
3	Ball	A182-F304, A182-F316
4	Stem	A276-304, A276-316
5	Seat ring	R.PTFE
6	Bonnet gasket	Graphite+304, PTFE
7	Bonnet stud	A193-B7, A193-B8, A320-L7
8	Bonnet stud nut	A194-2H, A194-8, A194-4
9	Packing	PTFE
10	Gland	A105, A182-F316, A350-LF2
11	Gland bolt	A193-B7, A193-B8
12	Stop plate	Carbon steel, Carbon steel+Zn
13	Handle	Carbon steel

SIZE('')	L(MM)	L1(MM)	H(MM)	W(MM)	WT(KG)	
	RF	BW			RF	BW
1/2	108	140	55	200	3.1	2.6
3/4	117	152	55	200	4.1	3.9
1	127	165	65	300	6	5.2
11/2	165	190	85	300	9.5	8.7
2	178	216	100	400	12.8	1.8
21/2	190	241	150	400	20	19
3	203	283	180	600	26	28
4	229	305	235	600	45	47
6	394	457	250	600	126	131
8	457	521	280	600	216	226
10	533	559	320	800	270	295
12	610	635	390	800	378	393

» CLASS 300

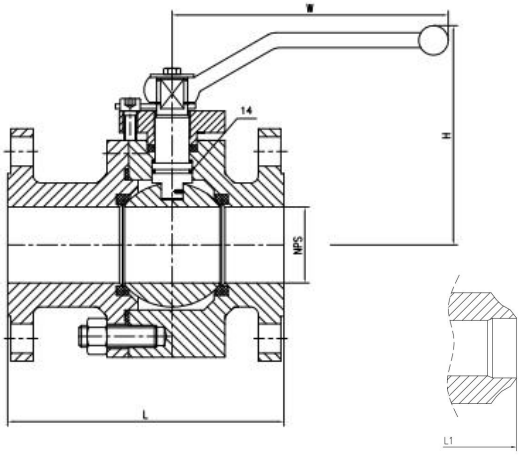

Standards

Steel ball valves:API 608/API 6D
Steel ball valves:ISO 14313
Fire resistant: API 607
Antistatic:API608
Steel valves:ASME B 16.34
Face to face:ASME B 16.10
End flanges:ASME B16.5
Butt weld ends: ASME B16.25
Inspection and test:API598/API6D

General features

Full port design
Bolted bonnet (BB) split body
Floating ball type
Blow-out proof stem
Fire resistant construction
Antistatic device
Stopper device ISO 5211 Mounting pad
Flanged or butt weld ends
Available with manual worm gear operator

Position	Description	Material
1	Body	A105, A182-F316, A350-LF2
2	Bonnet	A105, A182-F316, A350-LF2
3	Ball	A182-F304, A182-F316
4	Stem	A276-304, A276-316
5	Seat ring	R.PTFE
6	Bonnet gasket	Graphite+304, PTFE
7	Bonnet stud	A193-B7, A193-B8, A320-L7
8	Bonnet stud nut	A194-2H, A194-8, A194-4
9	Packing	PTFE
10	Gland	A105, A182-F316, A350-LF2
11	Gland bolt	A193-B7, A193-B8
12	Stop plate	Carbon steel, Carbon steel+Zn
13	Handle	Carbon steel

SIZE('')	L(MM)	L1(MM)	H(MM)	W(MM)	WT(KG)	
	RF	BW			RF	BW
1/2	140	140	55	200	3.5	2.8
3/4	152	152	55	200	4.6	3.1
1	165	165	65	300	6.7	4.4
11/2	190	190	85	300	10.5	5.5
2	216	216	400	250	14.5	8.7
21/2	241	241	400	300	22	13.5
3	283	283	600	350	29	17
4	305	305	600	480	50	31
6	103	457	250	600	141	108
8	502	521	280	600	242	194
10	568	559	320	800	302	234
12	648	635	390	800	423	325

» CLASS 600

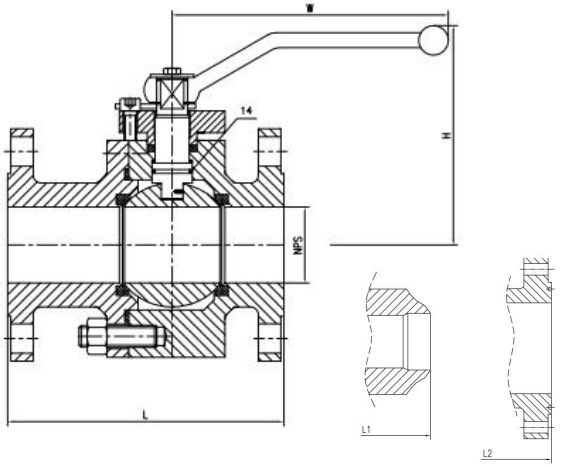

Standards

Steelballvalves:API608/API6D
Steel ball valves:ISO 14313
Fire resistant: API 607
Antistatic:API608
Steel valves:ASME B 16.34
Face to face:ASME B 16.10
End flanges:ASME B16.5
Butt weld ends:ASME B16.25
Inspection and test:API598/API6D

General features

Full port design
Bolted bonnet(BB)split body
Floating ball type
Blow-out proof stem
Fire resistant construction
Anti static device
Stopper device
ISO 5211 Mounting pad
Flanged or butt weld ends
Availablewithmanualwormgearoperator

Position	Description	Material
1	Body	A105, A182-F316, A350-LF2
2	Bonnet	A105, A182-F316, A350-LF2
3	Ball	A182-F304, A182-F316
4	Stem	A276-304, A276-316
5	Seat ring	R.PTFE
6	Bonnet gasket	Graphite+304, PTFE
7	Bonnet stud	A193-B7, A193-B8, A320-L7
8	Bonnet stud nut	A194-2H, A194-8, A194-4
9	Packing	PTFE
10	Gland	A105, A182-F316, A350-LF2
11	Gland bolt	A193-B7, A193-B8
12	Stop plate	Carbon steel, Carbon steel+Zn
13	Handle	Carbon steel

SIZE('')	L/L1(MM)	L2(MM)	H(MM)	W(MM)	WT(KG)	
	RF/BW	RTJ			RF	BW
1/2	165	/	58	200	4.5	3.8
3/4	190	/	58	300	5.5	4.1
1	216	/	68	300	8	5.6
11/2	241	/	89	400	12.5	7
2	292	295	105	400	18	12
21/2	330	333	158	600	27	18
3	356	359	190	600	35	23
4	432	435	247	600	61	43
6	559	562	262	800	172	139
8	/	/	/	/	/	/
10	/	/	/	/	/	/
12	/	/	/	/	/	/