CASTING FLOATING BALL VALVES

» CLASS 150

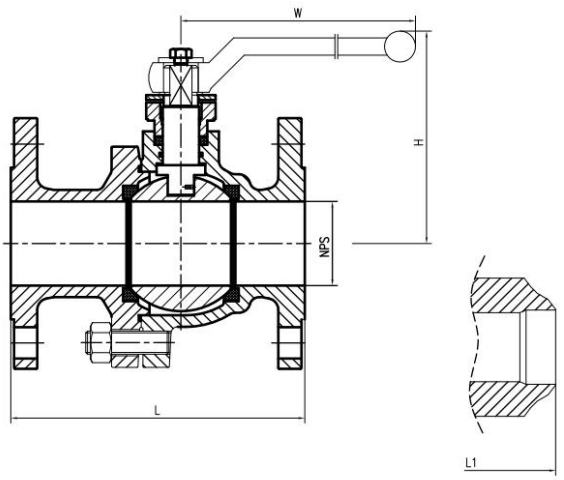

Standards

Steel ball valves:API 608/API 6D
Steel ball valves: ISO 14313
Fire resistant: API 607
Anti static:API 608
Steel valves:ASME B16.34
Face to face:ASME B16.10
End flanges:ASME B16.5
Inspection and test:API 598/API 6D

General features

Full port design
Bolted bonnet (BB) split body Floating ball type
Blow-out proof stem
Fire resistant construction
Anti static device
Stopper device
ISO 5211 Mounting pad
Flanged or butt weld ends
Available with manual worm gear

Item	Description	Material
1	Body	A216-WCB, A351-CF8M, A352-LCB
2	Bonnet	A216-WCB, A351-CF8M, A352-LCB
3	Ball	A105+ENP, A182-F304, A182-F316
4	Stem	A276-304, A276-316, A182-Gr.F6a
5	Seat ring	R.PTFE
6	Bonnet gasket	Graphite+304, PTFE, Graphite+51
7	Bonnet stud	A193-B7, A193-B8, A320-L7
8	Bonnet stud nut	A194-2H, A194-8, A194-4
9	Packing	PTFE
10	Gland flange	A216-WCB, A351-CF8M, A352-LCB
11	Gland bolt	A193-B7, A193-B8, A193-B7
12	Stop plate	Carbon steel, Carbon steel+Zn, Carbon steel
13	Handle	Carbon steel

SIZE('')		L1(MM)	H(MM)	W(MM)	WT(KG)	
	RF	BW			RF	BW
1/2	108	140	55	130	2.3	1.8
3/4	117	152	55	130	3	2.8
1	127	165	70	160	4.5	3.7
11/2	165	190	90	200	7	6.2
2	178	216	105	350	9.5	8.5
21/2	190	241	155	400	15	14
3	203	283	185	500	19	21
4	229	305	205	500	33	35
6	394	457	255	600	93	98
8	457	521	280	800	160	170
10	533	559	345	800	200	225
12	610	635	420	800	280	295

» CLASS 300

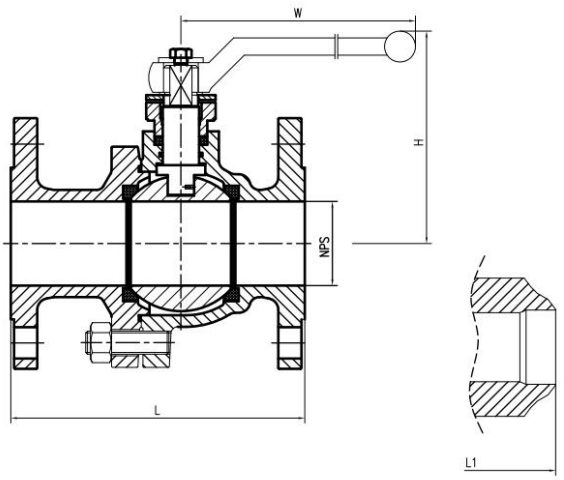

Standards

Steel ball valves:API 608/API 6D
Steel ball valves: ISO 14313
Fire resistant: API 607
Anti static:API 608
Steel valves:ASME B16.34
Face to face:ASME B16.10
End flanges:ASME B16.5
Inspection and test:API 598/API 6D

General features

Full port design
Bolted bonnet (BB) split body Floating ball type
Blow-out proof stem
Fire resistant construction
Anti static device
Stopper device
ISO 5211 Mounting pad
Flanged or butt weld ends
Available with manual worm gear operator

Item	Description	Material
1	Body	A216-WCB, A351-CF8M, A352-LCB
2	Bonnet	A216-WCB, A351-CF8M, A352-LCB
3	Ball	A105+ENP, A182-F304, A182-F316
4	Stem	A276-304, A276-316
5	Seat ring	R.PTFE
6	Bonnet gasket	Graphite+304, PTFE
7	Bonnet stud	A193-B7, A193-B8, A320-L7
8	Bonnet stud nut	A194-2H, A194-8, A194-4
9	Packing	PTFE
10	Gland flange	A216-WCB, A351-CF8M, A352-LCB
11	Gland bolt	A193-B7, A193-B8
12	Stop plate	Carbon steel, Carbon steel+Zn
13	Handle	Carbon steel

SIZE('')	L(MM)	L1(MM)	H(MM)	W(MM)	WT(KG)	
	RF	BW			RF	BW
1/2	140	140	55	130	2.5	1.8
3/4	152	152	55	130	3.5	2
1	165	165	70	160	5.5	3.2
11/2	190	190	90	200	10.5	5.5
2	216	216	105	350	14.5	8.7
21/2	241	241	153	400	23.5	15
3	283	283	187	500	30	18
4	305	305	206	500	55	36
6	403	457	255	600	118	85
8	502	521	280	800	200	152
10	568	559	345	800	250	182
12	648	635	420	800	330	232

» CLASS 600

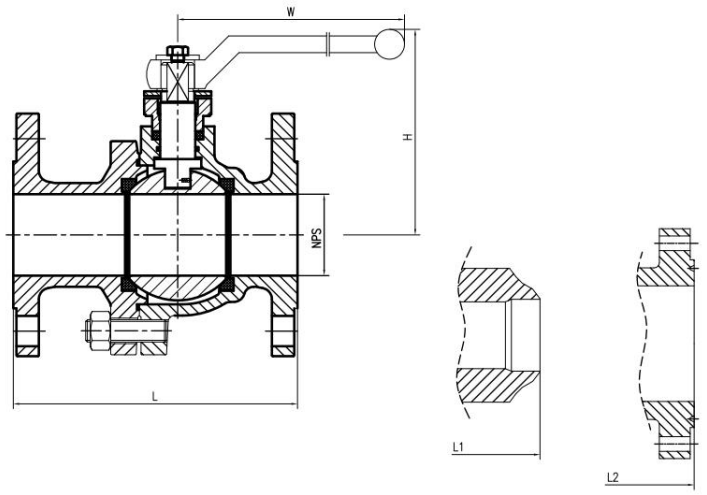

Standards

Steel ball valves:API 608/API 6D
Steel ball valves: ISO 14313
Fire resistant: API 607
Anti static:API 608
Steel valves:ASME B16.34
Face to face:ASME B16.10
End flanges:ASME B16.5
Inspection and test:API 598/API 6D

General features

Full port design
Bolted bonnet (BB) split body Floating ball type
Blow-out proof stem
Fire resistant construction
Anti static device
Stopper device
ISO 5211 Mounting pad
Flanged or butt weld ends
Available with manual worm gear operator

Item	Description	Material
1	Body	A216-WCB, A351-CF8M, A352-LCB
2	Bonnet	A216-WCB, A351-CF8M, A352-LCB
3	Ball	A105+ENP, A182-F304, A182-F316
4	Stem	A276-304, A276-316
5	Seat ring	R.PTFE
6	Bonnet gasket	Graphite+304, PTFE
7	Bonnet stud	A193-B7, A193-B8, A320-L7
8	Bonnet stud nut	A194-2H, A194-8, A194-4
9	Packing	PTFE
10	Gland flange	A216-WCB, A351-CF8M, A352-LCB
11	Gland bolt	A193-B7, A193-B8
12	Stop plate	Carbon steel, Carbon steel+Zn
13	Handle	Carbon steel

SIZE('')	L/L1(MM)	L2(MM)	H(MM)	W(MM)	WT(KG)	
	RF/BW	RTJ			RF	BW
1/2	165	/	61.5	130	3.3	2.6
3/4	190	/	61.5	160	4.5	3.1
1	216	/	78	200	7.2	4.8
11/2	241	/	101	350	13.5	8
2	292	295	120	400	19	13
21/2	330	333	174	500	31	22
3	356	359	212	600	39	27
4	432	435	234	600	71	53
6	559	562	289	800	153	120
8	/	/	/	/	/	/
10	/	/	/	/	/	/
12	/	/	/	/	/	/